TRANSFORMING TECHNOLOGY
EXPLORING KNOWLEDGE

Volume 3 Issue 2
April 2015 - June 2015

ISSN: 2322-0821(O)
ISSN: 2394-9910(P)

INTERNATIONAL RESEARCH JOURNAL OF ENGINEERING & APPLIED SCIENCES

www.irjeas.com

AC-DC CONVERTERS TOPOLOGY IN TRACTION APPLICATION FOR DC MOTOR DRIVE

Monica Tripathi[1], Hitesh Lade[2]

[1]M.Tech Scholar, Dept. of Electrical & Electronics Engg., Surabhi College of Engineering & Technology, Bhopal, India
[2]Head, Dept. of Electrical & Electronics Engg., Surabhi College of Engineering & Technology, Bhopal, India

Abstract- Separately excited dc motors fed by sequentially operated multistage converters are commonly used in mainline traction. The drive performance can be greatly improved by operating the multistage half controlled converters. Drive of a shunting locomotive of 25kV ac traction consists of a half-controlled converter feeding dc series traction motors. It suffers from two important limitations. First, at low output voltages the converter power factor is low. Secondly, the source current with square wave shape is rich in harmonics. In case of suburban and main line trains power rating is large, consequently, the adverse effects of the poor power factor, harmonics and harmonic disturbances on the supply network and telecommunication lines are unacceptable. To overcome these limitations multistage converters, which are operated with sequence control, are used to feed armatures of traction motors. The two half-controlled converters arrangementimproves power factor and reduction in reactive power. The designed converter is simulated using MATLAB software to predict the performance of both the different stages of the converter.

Keywords- controlled-rectifiers, dc motor speed

I. INTRODUCTION

DC Series motor was widely used in traction. It has high starting torque and capability for high torque overloads. With an increase in torque, the flux also increases; therefore, for the same increase in torque, the increase in motor current is less compared to other motors. Thus, during heavy torque overloads, power overload on the source and thermal overloading of the motor are kept limited to reasonable values. The motor speed-torque characteristic is also suitable for better sharing of loads between motors. Further due to a large inductance in the field, sharp fluctuations in supply voltage do not produce sharp peaks in armature current. Thus the motor commutation remains satisfactory, which does not happen in a separately excited motor, unless an additional inductance is connected in the armature circuit.With the availability of semiconductor converters, separately excited motor is now preferred over series motor. With independent control of armature and field, the speed-torque characteristics of separately excited motor can be shaped to satisfy the traction requirements in the optimum manner. Further, because of low regulation of its speed-torque characteristics, the coefficient of adhesion has higher value. On the other hand, series motor has a number of limitations. The field of a series motor cannot be easily controlled by semiconductor switches. If field control is not employed, the series motor must be designed with its speed equal to the highest desired speed of the drive. The higher base speeds are obtained by using fewer turns in the field winding. This, however, reduces the torque per ampere at start and therefore, acceleration. Further, there are a number of problems with regenerative and dynamic brakings of a series motor. On the hand, regenerative and dynamic brakings of separately excited motor are fairly simple and efficient, and can be carried out down to very low speeds.

(a)Traction drives :-One major application of electric drives is in electric traction, i.e. to transport men and material from one place to another.
Electric traction services can be broadly classified as:
(i) Electric trains:-Electric trains run on fixed rails. They are further classified as main line trains and suburban trains.

Main-line trains- Intercity passenger and goods trains which come under this category have trailer coaches carrying men and material driven by locomotives carrying driving motors. Since driving motors travel with locomotive, power supply to the motors is arranged in two ways: from overhead transmission line in electrical locomotive and from diesel generator set mounted on the locomotive in a diesel electric locomotive.

In electric locomotive, driving motor and power modulators are housed in the locomotive. An overhead transmission line is laid along or above the track (or rails). A current collector mounted over the locomotive has a conductor strip which slides against the supply conductor and thus maintains continuous contact between the supply and the locomotive. The supply conductor is commonly known as contact wire.

International Research Journal of Engineering & Applied Sciences
www.irjeas.com, ISSN(o): 2322-0821, ISSN(p): 2394-9910, Volume 3, Issue 2, April 2015 – June 2015, Page 17-21

II.THE 25 kV, 50 Hz ACTRACTION USING ON-LOAD TRANSFORMER TAP CHANGER

This scheme has been used both for main line and suburban trains. In India it is widely used for main line traction. All main line electric traction schemes, except Bombay-Igatpuri-Pune route, are using this scheme. The basic principles of operation of this scheme are based on transformer and uncontrolled rectifier control. Variable voltage for the dc motor control can also be obtained by either using an autotransformer or a transformer with tappings (either on primary or on secondary) followed by an uncontrolled rectifier as shown in figure. A reactor in the armature circuit to improve armature current waveform.

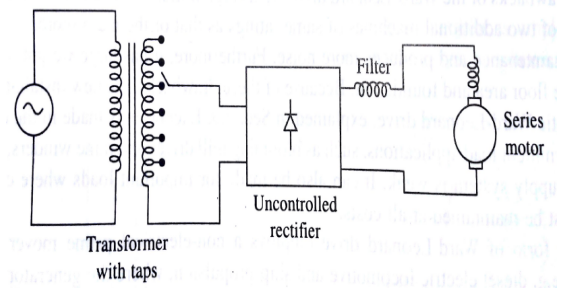

Fig.1 Armature voltage control using a transformer with taps and an uncontrolled rectifier

This scheme is employed in 25kV single phase 50Hz ac traction. The important features of this scheme are:

(a)Output voltage can be changed only in steps;
(b)Rectifier output voltage waveform does not change as the output voltage in reduced. A good power factor is maintained at the source and current harmonics introduced in the supply lines do not abnormally, like in the case of a controlled rectifier when motor voltage is reduced to small value.
(c)Because of the diode bridge, circuit is not capable of generation.

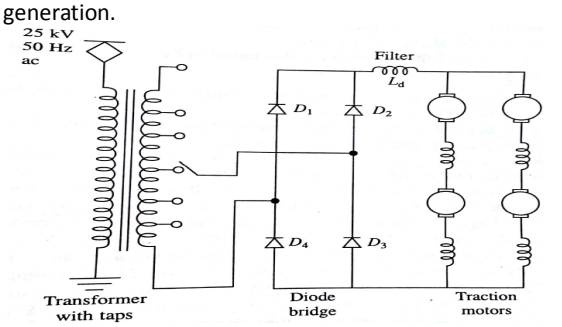

Fig.2 - 125kV, 50Hz ac traction using transformer with tap changer.

A step down transformer reduces the voltage from 25kV to a suitable value. The secondary winding is provided with tappings. An on-load tap changer is used to vary the taps on transformer without voltage surges. A diode rectifier bridge converts ac to dc and through smoothing reactor L_d feeds dc series traction motors, which are connected in appropriate series-parallel combinations. It has following advantages over dc drives employing resistance control.
(i)Higher efficiency as the starting, speed and torque control are done by varying armature voltage instead of armature resistance.
(ii)Better adhesion, because with armature voltage control the motor speed-torque characteristics are less dropping compared to armature resistance control.
(iii)In underground trains, one is forced to use low voltage due to limited space available between the train and tunnel. No such restriction is applicable to over ground traction. In case of dc traction, the maximum transmission voltage depends on the number of motors in series and their voltage rating because no simple means were available for stepping down the dc voltage

Advantages of semiconductor converter controlled drives

These are now widely used in ac and dc tractions involving dc and ac motors. The semiconductor converter controlled drives have several advantages.
(i) High efficiency.
(ii)Low maintenance requirements due to absence of moving parts.
(iii)Better adhesion due to step less control of motor torque and fast response of semiconductor converter. Wheel-slip control is very simple.
(iv)Higher acceleration, deceleration and speed due to better adhesion.
(v)Increased comfort of passengers due to smooth acceleration and braking.
(vi) Easy maintenance, repair and fault diagnosis.
(vii) Interfaces more readily with automatic train control.
(viii) Longer life.

III.DC MOTOR DRIVES

Motor drives are used in a very wide power range, from a few watts to many thousands of kilowatts, in applications ranging from very precise, high-performance position-controlled drives in robotics to variable-speed drives for adjusting flow rates in pumps. In all drives where the speed and position are controlled, a power electronic converter is needed as an interface between the input power and the motor. Electric drive is more and more popular for its simplicity, cleanliness, easy and smooth control, flexibility in layout, DC drives are widely used in applications requiring adjustable speed, good speed regulation and frequent starting, braking and reversing. Some important applications are rolling mills, excavators and cranes. Fractional horsepower dc motors are widely used as servo motors for positioning and tracking.

(a) **Design of two stage half-controlled converter**-
The two-stage converter uses two half-controlled converters connected in series. A transformer with two identical secondaries feeds the half-controlled converters. For dc output voltage from 0 to half, only converter I is controlled and converter II is bypassed by its diodes. Figure shows the waveform of dc output voltage and the source current for the converter I firing

angle $\alpha_1 = 90^0$. At half of full-output voltage, $\alpha 1 = 0^0$. For the output voltage between half and full, α_1 is retained at 0^0 and the firing angle of converted II is controlled between 180^0 and 0^0. Figure shows the converter output voltage and source current harmonics for α_1=0 and $\alpha_{11} = 90^0$. The jump in source current is now reduced to half compared to the single stage converter. Considerable reduction in reactive power, leading to improvement in power factor, is obtained. In main line traction several pairs of two series connected motors are employed, consequently the converter output voltage falls in the range of 1000 to 1500V dc.

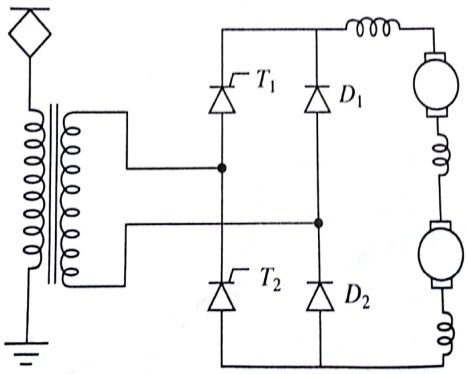

Fig.3 Drive of shunting locomotive of 25kV, ac traction with thyristor converter Ref[15]

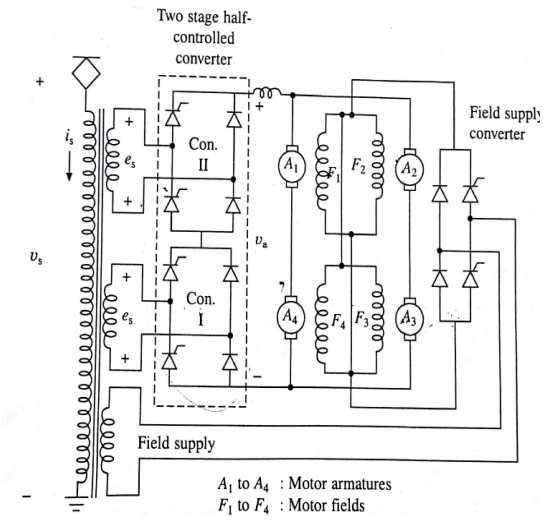

Fig.4 - 25kVac traction employing two stage converter feeding four separately excited motors. Field supply is from a single-stage converterRef[15]

In single stage power converter, first at low output voltages the converter power factor is low. Second, the source current is rich in harmonics. Considerable reduction in reactive power, leading to improvement in power is obtained. A comparison of reactive power at rated motor current is shown in figure for single stage and two stage control

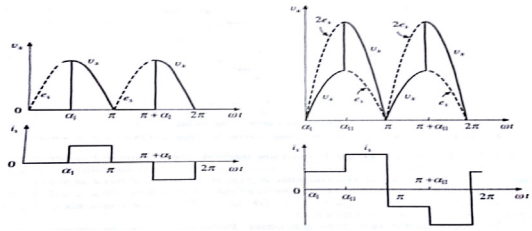

Fig.5 The two stage converter waveforms at (a) 0.25 (b) 0.75 per unit output voltages

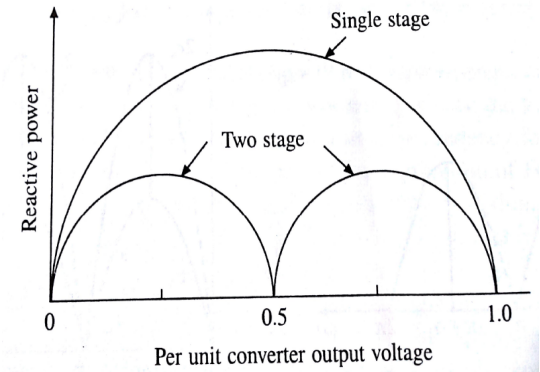

Fig.6 Reactive power at rated motor current for single and two stage converters

IV.SIMULATIONS AND RESULTS

Design 25kv ac traction employing two stage converter feeding four separately excited motors

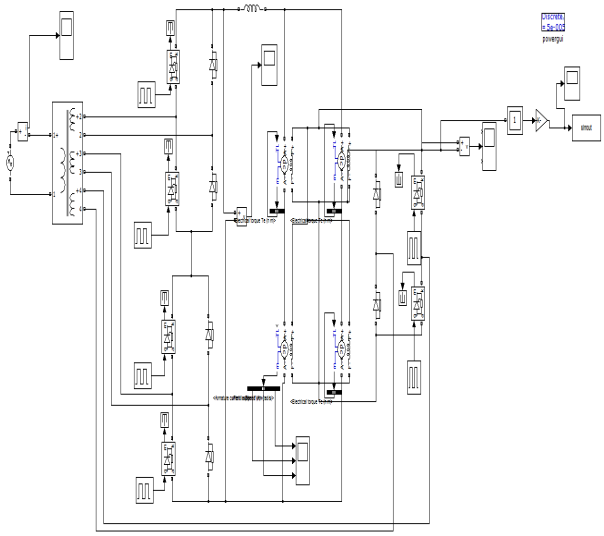

Fig.7 Simulink model of 25Kv ac traction employing feeding four separately excited motors.

From the comparison of the results of 25kV ac traction half-controlled converter and 25kV ac two stage half-controlled converter it gives better improvement in power factor and reduction in reactive power . It shows that the voltage of field winding is increased then speed of motor is increased, torque is decreased. The armature winding voltage is increased then the speed is slow and torque is increased. In main line traction

several pairs of two series connected motors are employed then the converter output voltage falls in the range of 1000 to 1500vdc.

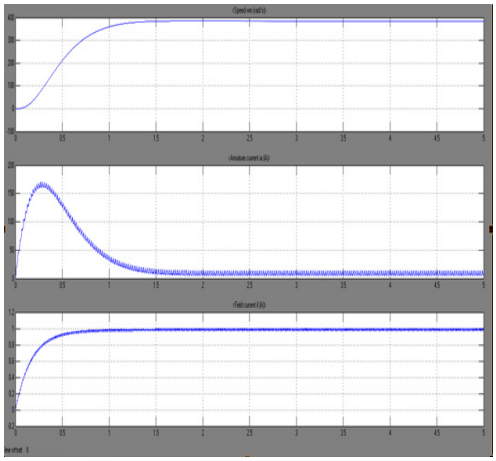

Fig.8 Simulation results of DC motor speed, armature current, Field current

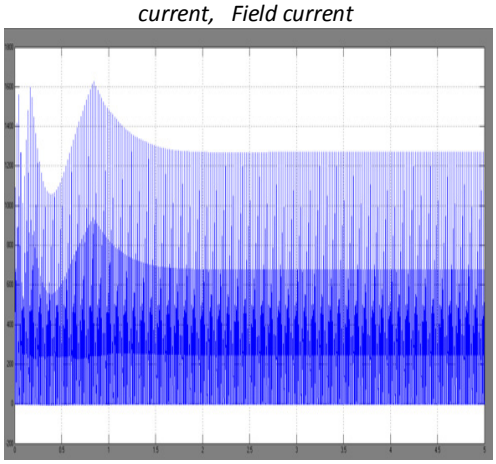

Fig.9 DC output voltage waveform

V. CONCLUSION

In this paper, we use semiconductor converter controlled drives. These are now widely used both in ac and dc tractions involving dc and ac motors. The semiconductor converter controlled drives have high efficiency, low maintenance requirements due to absence of moving parts, higher acceleration, deceleration and speed due to better adhesion. The 25KV ac traction using semiconductor converter controlled dc motors. The 25 KV the simplest arrangement consists of half-controlled converter feeding dc series traction motors. This arrangement is sometimes used in low power shunting locomotives.

VII. REFERENCES

[1] Hillmansen, S, "Sustainable traction drives", IET Professional Development Course on Railway Electrification Infrastructure and Systems Date of Publication year: 2011, pp. no. 199-209

[2] Balazs, G.G; "Examination of new current control methods for modern PWM controlled AC electric locomotives" 6th IET International Conference on Power Electronics, Machines and Drives (PEMD 2012), Date of Publication year: 2012, pp.no.1-5

[3]Hill, R.J."Electric railway traction .I. Electric traction and DC traction motor drives", Power Engineering Journal vol-8, Date of Publication year: 1994, pp no.47-56

[4] Bezold, Karl-Heinz, "Thyristor Converters for Traction DC Motor Drives", IEEE transactions on Industry Applications, Date of Publication year-1973,pp no. 612-617

[5] Hill, R.J. "Traction drives and Converters", 3rd IET Professional Development Course on Railway Electrification Infrastructure and Systems, Date of Publication year -2007,pp no.185-196

[6] Poornima, R "Operating modes of single-phase thyristor converter fed dc drives using Phase Angle Control scheme-A monograph", IEEE International Conference on Industrial Technology, Date of Publication year-2006,pp no.2402-2407

[7]Abbott, K.M."Simulation and Control of Thyristor Drives", IEEE transactions on Industrial Electronics and Control Instrumentation" Date of Publication year-1978, pp no.130-137

[8]Bhat, Subbanna P, " Two-Stage Sequentially Operated Regenerative Converters with Controlled Fly wheeling", IEEE transactions on Industry Applications, Date of Publication year 1985 ,pp no.1441-1452

[9]Langella, Roberto "Modeling waveform distortion produced by DC locomotive conversion system. Part 1: Locomotive model" 11th International Conference on Harmonics and Quality of Power, Date of Publication year 2004, pp no.2004

[10] BhaveshBhalja, "High speed Protection Scheme for traction OHE 25 kV AC Indian Railway system", IEEE proceedings, Date of Publication year 13 Nov. 2008

[11]Grman -Martin, "Single phase PWM rectifier in traction application", Journal of Electrical Engineering, Date of Publication year 2011,pp no.206-212

[12]Juan W. Dixon, "Series and Parallel operation of hysteresis current-controlled PWM rectifiers, Date of Publication year 1989, Vol 25, no.4

[13]J. Bauer, "Single-phase Pulse- width modulated rectifier", Date of Publication year 2008, Vol. 48 no.3

[14]Luis Moran, "A Clean Four-Quadrant sinusoidal power rectifier using multistage converters for subway applications", Date of Publication year June 2005, Vol.52, no.3

[15] G.K. Dubey, Electrical drives, PrenticeHall, Englewood Cliffs, 1990

[16] B.K. Bose, Power Electronics and AC drives, Prentice-hall, New Jersey, 1986